20 TONNE
AT20
PICK & CARRY

FRANNA CRANE

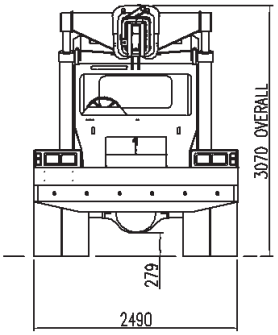

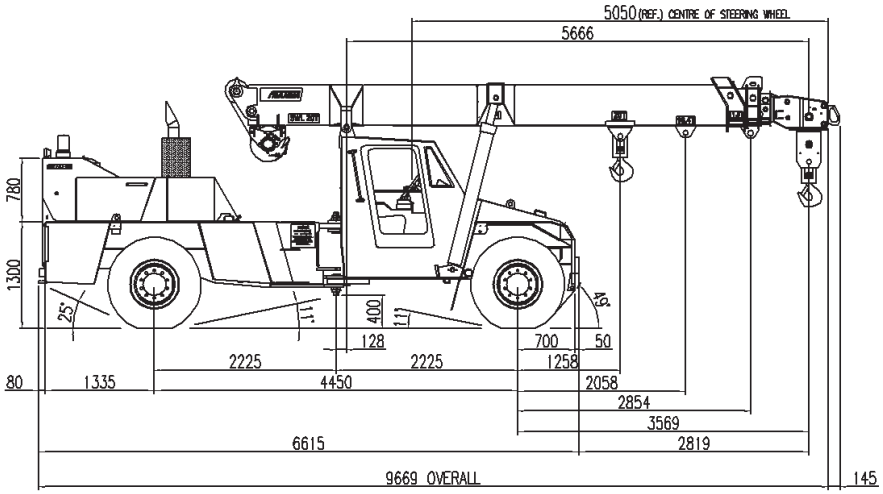

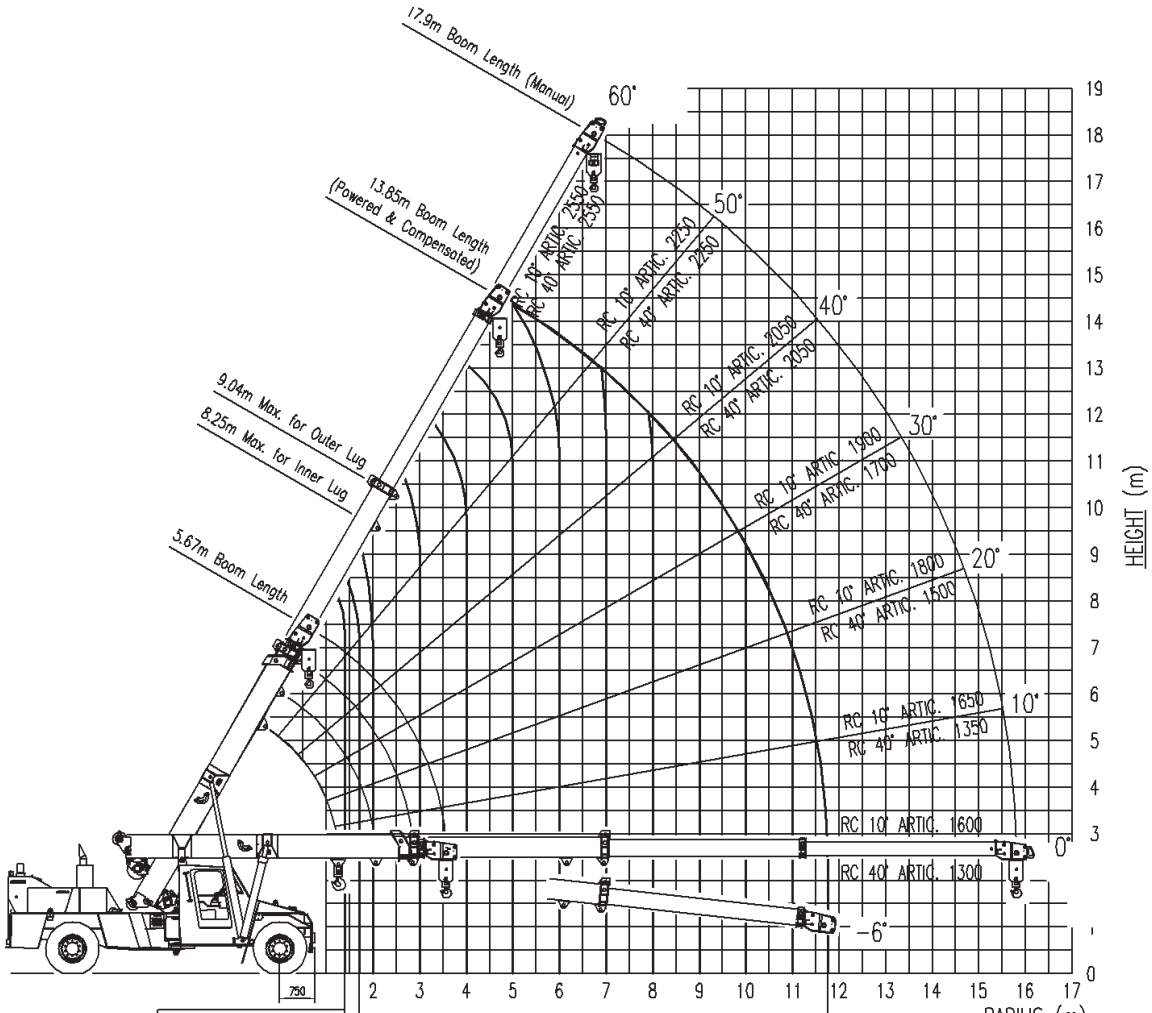

RC AT 1.4M 20000 KG												
RC AT 1.7M 19000KG												
RC (KG) 10° ARTIC.	16800	11400	8300	6500	5250	4350	3700	3200	2800	2450	2250	WINCH RC (KG) 10° ARTIC.
RC (KG) 40° ARTIC.	12600	9950	7200	5600	4500	3750	3150	2700	2350	2050	1850	WINCH RC (KG) 40° ARTIC.